COMMONWEALTH OF KENTUCKY
TRANSPORTATION CABINET
www.transportation.ky.gov/

Andy Beshear
GOVERNOR

Jim Gray
SECRETARY

March 12, 2021

CALL NO. 101
CONTRACT ID NO. 211009
ADDENDUM # 2

Subject: Butler County, NHPP 0031 (016)
Letting March 19, 2021

(1) Revised – Proposal Bid Items – Pages 116-120 of 120
(2) Revised – Plan Sheets – R2, R2B, R2D, R2E, R2G, and S1

Proposal revisions are available at http://transportation.ky.gov/Construction-Procurement/.

If you have any questions, please contact us at 502-564-3500.

Sincerely,

Rachel Mills,

Rachel Mills, P.E.
Director
Division of Construction Procurement

RM:mr
Enclosures

PROPOSAL BID ITEMS

Report Date 3/12/21

Section: 0001 - PAVING

LINE	BID CODE	ALT	DESCRIPTION	QUANTITY	UNIT	UNIT PRIC	FP	AMOUNT
0010	00003		CRUSHED STONE BASE	16,964.00	TON		$	
0020	00080		CRUSHED AGGREGATE SIZE NO 23	37,235.00	TON		$	
0030	00100		ASPHALT SEAL AGGREGATE	125.00	TON		$	
0040	00103		ASPHALT SEAL COAT	15.00	TON		$	
0050	00190		LEVELING & WEDGING PG64-22	69.00	TON		$	
0060	00214		CL3 ASPH BASE 1.00D PG64-22	5,914.00	TON		$	
0070	00221		CL2 ASPH BASE 0.75D PG64-22	5,356.00	TON		$	
0080	00301		CL2 ASPH SURF 0.38D PG64-22	3,451.00	TON		$	
0100	00356		ASPHALT MATERIAL FOR TACK	28.00	TON		$	
0110	02702		SAND FOR BLOTTER	49.00	TON		$	
0115	22906ES403		CL3 ASPH SURF 0.38A PG64-22 (ADDED: 3-12-21)	925.00	TON		$	

Section: 0002 - ROADWAY

LINE	BID CODE	ALT	DESCRIPTION	QUANTITY	UNIT	UNIT PRIC	FP	AMOUNT
0120	00021		DRAINAGE BLANKET-EMBANKMENT	1,943.00	CUYD		$	
0130	00078		CRUSHED AGGREGATE SIZE NO 2	12,752.00	TON		$	
0140	01000		PERFORATED PIPE-4 IN	89.00	LF		$	
0150	01010		NON-PERFORATED PIPE-4 IN	16.00	LF		$	
0160	01028		PERF PIPE HEADWALL TY 3-4 IN	1.00	EACH		$	
0170	01032		PERF PIPE HEADWALL TY 4-4 IN	1.00	EACH		$	
0180	01705		REMOVE CURB & GUTTER BOX INLET	3.00	EACH		$	
0190	01717		FILL AND CAP INLET	1.00	EACH		$	
0200	01718		REMOVE INLET REMOVE FLUME INLET	5.00	EACH		$	
0210	01825		ISLAND CURB AND GUTTER	102.00	LF		$	
0220	01982		DELINEATOR FOR GUARDRAIL MONO DIRECTIONAL WHITE	73.00	EACH		$	
0230	01983		DELINEATOR FOR GUARDRAIL MONO DIRECTIONAL YELLOW	27.00	EACH		$	
0240	01987		DELINEATOR FOR GUARDRAIL BI DIRECTIONAL WHITE	7.00	EACH		$	
0250	02091		REMOVE PAVEMENT	2,031.00	SQYD		$	
0260	02159		TEMP DITCH	6,377.00	LF		$	
0270	02160		CLEAN TEMP DITCH	3,189.00	LF		$	
0280	02200		ROADWAY EXCAVATION	227,764.00	CUYD		$	
0290	02223		GRANULAR EMBANKMENT	26,517.00	CUYD		$	
0300	02242		WATER	200.00	MGAL		$	
0310	02262		FENCE-WOVEN WIRE TYPE 1	5,495.00	LF		$	
0320	02265		REMOVE FENCE	4,979.00	LF		$	
0330	02363		GUARDRAIL CONNECTOR TO BRIDGE END TY A	4.00	EACH		$	
0340	02367		GUARDRAIL END TREATMENT TYPE 1	2.00	EACH		$	
0350	02369		GUARDRAIL END TREATMENT TYPE 2A	4.00	EACH		$	
0360	02381		REMOVE GUARDRAIL	9,997.00	LF		$	
0370	02391		GUARDRAIL END TREATMENT TYPE 4A	7.00	EACH		$	

PROPOSAL BID ITEMS

Report Date 3/12/21

LINE	BID CODE	ALT	DESCRIPTION	QUANTITY	UNIT	UNIT PRIC	FP	AMOUNT
0380	02429		RIGHT-OF-WAY MONUMENT TYPE 1	21.00	EACH		$	
0390	02432		WITNESS POST	3.00	EACH		$	
0400	02545		CLEARING AND GRUBBING 35 ACRES	1.00	LS		$	
0410	02562		TEMPORARY SIGNS	487.00	SQFT		$	
0420	02585		EDGE KEY	47.00	LF		$	
0430	02603		FABRIC-GEOTEXTILE CLASS 2	91,585.00	SQYD		$	
0440	02650		MAINTAIN & CONTROL TRAFFIC	1.00	LS		$	
0450	02653		LANE CLOSURE	2.00	EACH		$	
0460	02671		PORTABLE CHANGEABLE MESSAGE SIGN	4.00	EACH		$	
0470	02690		SAFELOADING	24.40	CUYD		$	
0480	02696		SHOULDER RUMBLE STRIPS	21,324.00	LF		$	
0490	02701		TEMP SILT FENCE	6,377.00	LF		$	
0500	02703		SILT TRAP TYPE A	34.00	EACH		$	
0510	02704		SILT TRAP TYPE B	34.00	EACH		$	
0520	02705		SILT TRAP TYPE C	34.00	EACH		$	
0530	02706		CLEAN SILT TRAP TYPE A	34.00	EACH		$	
0540	02707		CLEAN SILT TRAP TYPE B	34.00	EACH		$	
0550	02708		CLEAN SILT TRAP TYPE C	34.00	EACH		$	
0560	02726		STAKING	1.00	LS		$	
0570	02775		ARROW PANEL	2.00	EACH		$	
0580	05950		EROSION CONTROL BLANKET	13,588.00	SQYD		$	
0590	05952		TEMP MULCH	81,233.00	SQYD		$	
0600	05953		TEMP SEEDING AND PROTECTION	108,311.00	SQYD		$	
0610	05963		INITIAL FERTILIZER	4.00	TON		$	
0620	05964		MAINTENANCE FERTILIZER	7.00	TON		$	
0630	05985		SEEDING AND PROTECTION	136,521.00	SQYD		$	
0640	05992		AGRICULTURAL LIMESTONE	101.00	TON		$	
0650	06510		PAVE STRIPING-TEMP PAINT-4 IN	25,090.00	LF		$	
0660	06542		PAVE STRIPING-THERMO-6 IN W	16,173.00	LF		$	
0670	06543		PAVE STRIPING-THERMO-6 IN Y	19,474.00	LF		$	
0680	06544		PAVE STRIPING-THERMO-8 IN W	347.00	LF		$	
0690	06546		PAVE STRIPING-THERMO-12 IN W	3,060.00	LF		$	
0700	06550		PAVE STRIPING-TEMP REM TAPE-W	9,003.00	LF		$	
0710	06551		PAVE STRIPING-TEMP REM TAPE-Y	289.00	LF		$	
0720	06556		PAVE STRIPING-DUR TY 1-6 IN W	640.00	LF		$	
0730	06557		PAVE STRIPING-DUR TY 1-6 IN Y	1,240.00	LF		$	
0740	06568		PAVE MARKING-THERMO STOP BAR-24IN	80.00	LF		$	
0750	06574		PAVE MARKING-THERMO CURV ARROW	4.00	EACH		$	
0760	10020NS		FUEL ADJUSTMENT	125,733.00	DOLL	$1.00	$	$125,733.00
0770	10030NS		ASPHALT ADJUSTMENT	61,439.00	DOLL	$1.00	$	$61,439.00
0780	20166ES810		TEMPORARY PIPE	84.00	LF		$	
0790	20191ED		OBJECT MARKER TY 3	2.00	EACH		$	
0800	20550ND		SAWCUT PAVEMENT	8,863.00	LF		$	
0810	21289ED		LONGITUDINAL EDGE KEY	4,777.00	LF		$	
0820	21802EN		G/R STEEL W BEAM-S FACE (7 FT POST)	4,705.00	LF		$	
0830	22665EN		REMOVE NON-MOUNTABLE MEDIAN	3,025.00	SQYD		$	
0840	23839EC		REMOVE CONCRETE MEDIAN	121.00	SQYD		$	
0850	23864EC		CHANNEL LINING CLASS III-MOD	400.00	TON		$	
0860	24489EC		INLAID PAVEMENT MARKER	248.00	EACH		$	

PROPOSAL BID ITEMS

Report Date 3/12/21

LINE	BID CODE	ALT	DESCRIPTION	QUANTITY	UNIT	UNIT PRIC	FP	AMOUNT
0870	24679ED		PAVE MARK THERMO CHEVRON	1,366.00	SQFT		$	
0880	24683ED		PAVE MARKING-THERMO DOTTED LANE EXTEN	1,022.00	LF		$	

Section: 0003 - DRAINAGE

LINE	BID CODE	ALT	DESCRIPTION	QUANTITY	UNIT	UNIT PRIC	FP	AMOUNT
0890	00461		CULVERT PIPE-15 IN	67.30	LF		$	
0900	00462		CULVERT PIPE-18 IN	222.40	LF		$	
0910	00464		CULVERT PIPE-24 IN	171.00	LF		$	
0920	00466		CULVERT PIPE-30 IN	76.00	LF		$	
0930	00521		STORM SEWER PIPE-15 IN	50.90	LF		$	
0940	00522		STORM SEWER PIPE-18 IN	398.80	LF		$	
0950	00524		STORM SEWER PIPE-24 IN	144.90	LF		$	
0960	01202		PIPE CULVERT HEADWALL-15 IN	4.00	EACH		$	
0970	01204		PIPE CULVERT HEADWALL-18 IN	5.00	EACH		$	
0980	01208		PIPE CULVERT HEADWALL-24 IN	5.00	EACH		$	
0990	01210		PIPE CULVERT HEADWALL-30 IN	4.00	EACH		$	
1000	01310		REMOVE PIPE	118.60	LF		$	
1010	01314		PLUG PIPE	1.00	EACH		$	
1020	01450		S & F BOX INLET-OUTLET-18 IN	4.00	EACH		$	
1030	01480		CURB BOX INLET TYPE B	2.00	EACH		$	
1040	01511		DROP BOX INLET TYPE 5D	2.00	EACH		$	
1050	01517		DROP BOX INLET TYPE 5F	6.00	EACH		$	
1060	01584		CAP DROP BOX INLET	1.00	EACH		$	
1070	01585		REMOVE DROP BOX INLET	1.00	EACH		$	
1080	01642		JUNCTION BOX-18 IN	1.00	EACH		$	
1090	01653		JUNCTION BOX-SPECIAL	10.00	EACH		$	
1100	02483		CHANNEL LINING CLASS II	3,071.00	TON		$	
1110	02484		CHANNEL LINING CLASS III	1,183.00	TON		$	
1120	02607		FABRIC-GEOTEXTILE CLASS 2 FOR PIPE	5,760.00	SQYD	$1.75	$	$10,080.00
1130	02625		REMOVE HEADWALL	19.00	EACH		$	
1140	03262		CLEAN PIPE STRUCTURE	7.00	EACH		$	
1150	20911ED		HIGH SLUMP 3000 PSI GROUT	134.00	CUYD		$	
1160	23131ER701		PIPELINE VIDEO INSPECTION	2,325.00	LF		$	
1170	24731EC		REMOVE AND RESET HEADWALL	2.00	EACH		$	
1180	24863EC		PVC FOLD AND FORM PIPE LINER-24 IN	229.40	LF		$	
1190	24864EC		PVC FOLD AND FORM PIPE LINER-30 IN	519.60	LF		$	

Section: 0004 - BRIDGE

LINE	BID CODE	ALT	DESCRIPTION	QUANTITY	UNIT	UNIT PRIC	FP	AMOUNT
1200	02006		REMOVE CONCRETE MEDIAN	294.00	LF		$	
1215	02998		MASONRY COATING (ADDED: 3-12-21)	515.00	SQYD		$	
1220	03299		ARMORED EDGE FOR CONCRETE	188.00	LF		$	
1230	03300		ELIMINATE TRANSVERSE JOINT	188.00	LF		$	

PROPOSAL BID ITEMS

Report Date 3/12/21

LINE	BID CODE	ALT	DESCRIPTION	QUANTITY	UNIT	UNIT PRIC	FP	AMOUNT
1250	04795		CONDUIT-2 IN	351.00	LF		$	
1260	04810		ELECTRICAL JUNCTION BOX	2.00	EACH		$	
1270	08151		STEEL REINFORCEMENT-EPOXY COATED	10,894.00	LB		$	
1280	08504		EPOXY SAND SLURRY	131.00	SQYD		$	
1290	08510		REM EPOXY BIT FOREIGN OVERLAY	1,568.00	SQYD		$	
1300	08526		CONC CLASS M FULL DEPTH PATCH	23.00	CUYD		$	
1310	08534		CONCRETE OVERLAY-LATEX	114.60	CUYD		$	
1320	08549		BLAST CLEANING	2,226.00	SQYD		$	
1330	08551		MACHINE PREP OF SLAB	523.00	SQYD		$	
1340	23032EN		BRIDGE BARRIER RETROFIT	684.00	LF		$	
1360	24094EC		PARTIAL DEPTH PATCHING	29.00	CUYD		$	

Section: 0005 - SIGNING

LINE	BID CODE	ALT	DESCRIPTION	QUANTITY	UNIT	UNIT PRIC	FP	AMOUNT
1370	06400		GMSS GALV STEEL TYPE A	1,857.00	LB		$	
1380	06401		FLEXIBLE DELINEATOR POST-M/W	178.00	EACH		$	
1390	06404		FLEXIBLE DELINEATOR POST-M/Y	82.00	EACH		$	
1400	06405		SBM ALUMINUM PANEL SIGNS	495.50	SQFT		$	
1410	06406		SBM ALUM SHEET SIGNS .080 IN	229.00	SQFT		$	
1420	06407		SBM ALUM SHEET SIGNS .125 IN	506.00	SQFT		$	
1430	06410		STEEL POST TYPE 1	1,157.00	LF		$	
1440	06441		GMSS GALV STEEL TYPE C	1,320.00	LB		$	
1450	06490		CLASS A CONCRETE FOR SIGNS	13.10	CUYD		$	
1460	06491		STEEL REINFORCEMENT FOR SIGNS	266.00	LB		$	
1470	20419ND		ROADWAY CROSS SECTION	2.00	EACH		$	
1480	21373ND		REMOVE SIGN	2.00	EACH		$	
1490	21596ND		GMSS TYPE D	16.00	EACH		$	
1500	24631EC		BARCODE SIGN INVENTORY	83.00	EACH		$	

Section: 0006 - LIGHTING

LINE	BID CODE	ALT	DESCRIPTION	QUANTITY	UNIT	UNIT PRIC	FP	AMOUNT
1510	04714		POLE 120 FT MTG HT HIGH MAST	8.00	EACH		$	
1520	04761		LIGHTING CONTROL EQUIPMENT	1.00	EACH		$	
1530	04797		CONDUIT-3 IN	1,000.00	LF		$	
1540	04800		MARKER	17.00	EACH		$	
1550	04820		TRENCHING AND BACKFILLING	6,700.00	LF		$	
1560	04940		REMOVE LIGHTING	1.00	LS		$	
1570	20392NS835		ELECTRICAL JUNCTION BOX TYPE C	11.00	EACH		$	
1580	20410ED		MAINTAIN LIGHTING	1.00	LS		$	
1590	21543EN		BORE AND JACK CONDUIT	160.00	LF		$	
1600	23161EN		POLE BASE-HIGH MAST	75.00	CUYD		$	
1610	24749EC		HIGH MAST LED LUMINAIRE	43.00	EACH		$	
1620	24851EC		CABLE-NO. 10/3C DUCTED	10,500.00	LF		$	

211009

PROPOSAL BID ITEMS

Report Date 3/12/21

Section: 0007 - DEMOBILIZATION &/OR MOBILIZATION

LINE	BID CODE	ALT	DESCRIPTION	QUANTITY	UNIT	UNIT PRIC	FP	AMOUNT
1630	02568		MOBILIZATION	1.00	LS		$	
1640	02569		DEMOBILIZATION	1.00	LS		$	

COUNTY OF	ITEM NO.	SHEET NO.
BUTLER	3-2042.30	R2

TYPICAL SECTIONS

10 0 10 20 30

GRAPHIC SCALE IN FEET

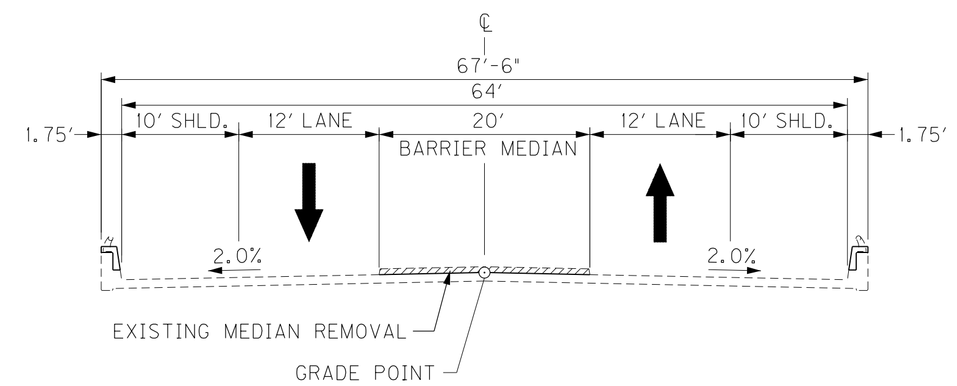

BRIDGE SECTION - SEE STRUCTURES PLANS

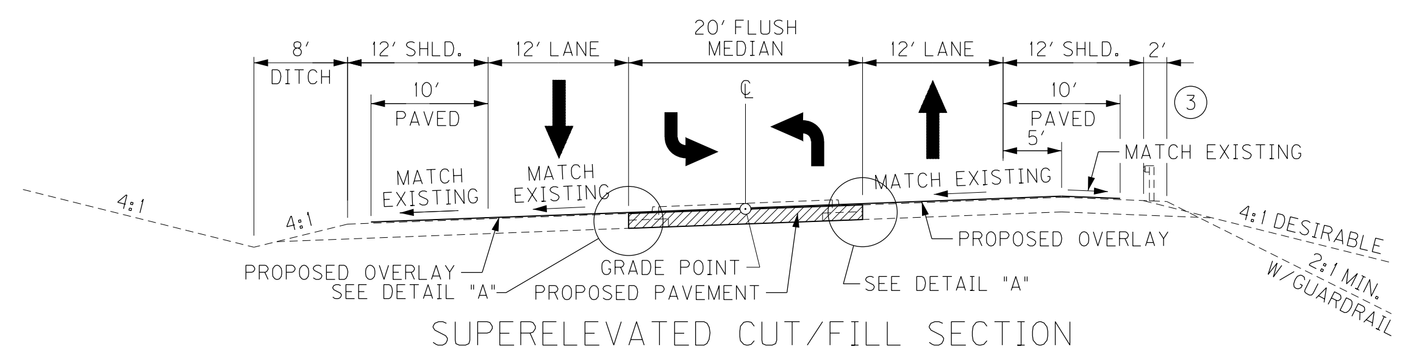

SUPERELEVATED CUT/FILL SECTION

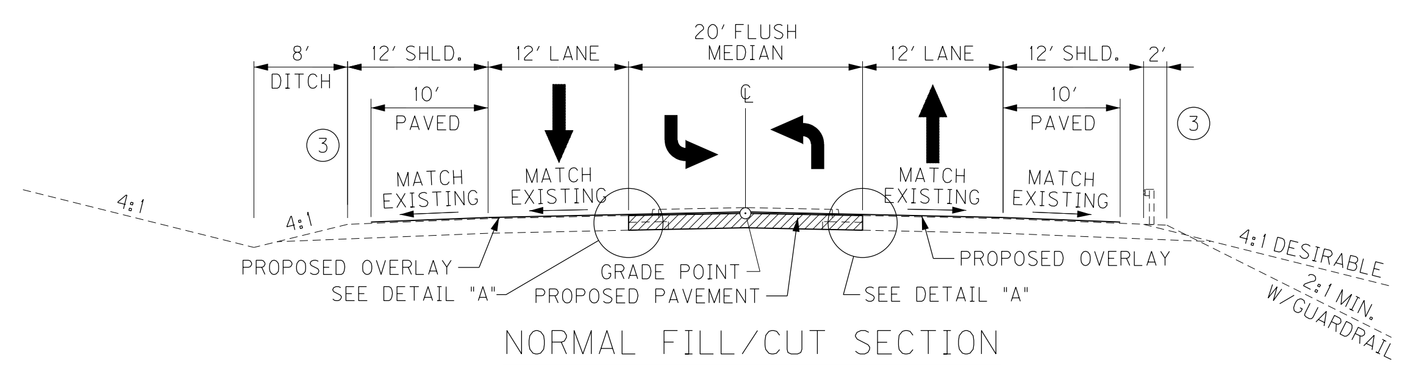

NORMAL FILL/CUT SECTION

US 231

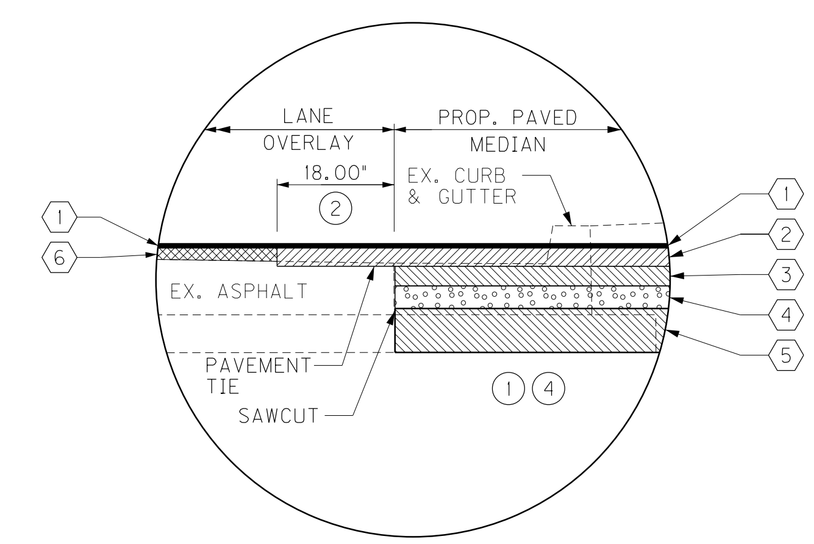

DETAIL "A"

NOT TO SCALE

1. 1.50" CL2 ASPH SURF 0.38D PG64-22
2. 2.50" CL2 ASPH BASE 0.75D PG64-22
3. 3.00" CL2 ASPH BASE 0.75D PG64-22
4. 6.00" CSB
5. 15.00" CRUSHED AGGREGATE SIZE NO. 23
6. LEVELING AND WEDGING PG64-22 (AS REQUIRED)

NOTES

1. ROCK ROADBED (CRUSHED AGGREGATE SIZE NO. 23) SHALL BE WRAPPED IN GEOTEXTILE FABRIC CLASS 2.
2. PAVEMENT TIE SHALL BE INCIDENTAL TO ASPHALT CONSTRUCTION.
3. A MINIMUM OF 2' OF SHOULDER SHALL BE PRESENT BEYOND THE FACE OF ALL NEW GUARDRAIL.
4. REMOVAL OF MATERIAL NEEDED TO REACH PROPOSED ROCK ROADBED DEPTH IS INCIDENTAL TO MEDIAN REMOVAL QUANTITIES.

US 231 & NATCHER PARKWAY INTERCHANGE
TYPICAL SECTIONS
US 231

POWER INROADS V8.11.9.397 E-SHEET NAME: USER: USJH673619 DATE PLOTTED: March 10, 2021 FILE NAME: J:\187414 - US 231 AND NATCHER PARKWAY - BUTLER COUNTY\PHASE 2 DESIGN\CADD\TYPICAL SECTIONS\R00200TS.DGN

TYPICAL SECTIONS

COUNTY OF	ITEM NO.	SHEET NO.
BUTLER	3-2042.30	R2

REVISED 3-11-2021

10 0 10 20 30

GRAPHIC SCALE IN FEET

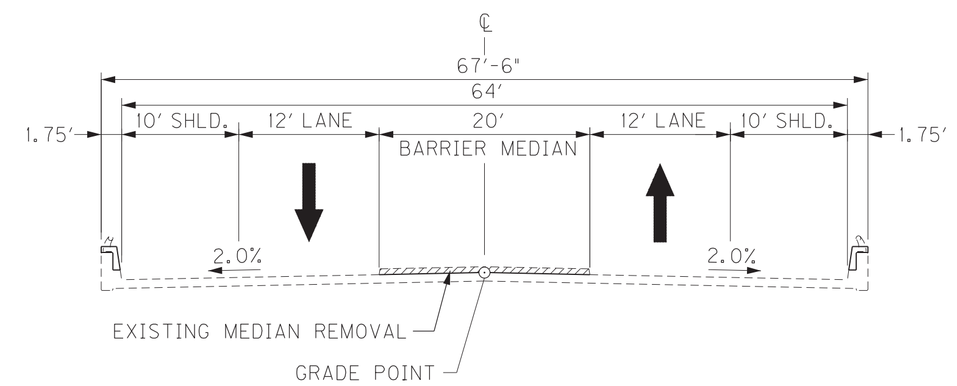

BRIDGE SECTION - SEE STRUCTURES PLANS

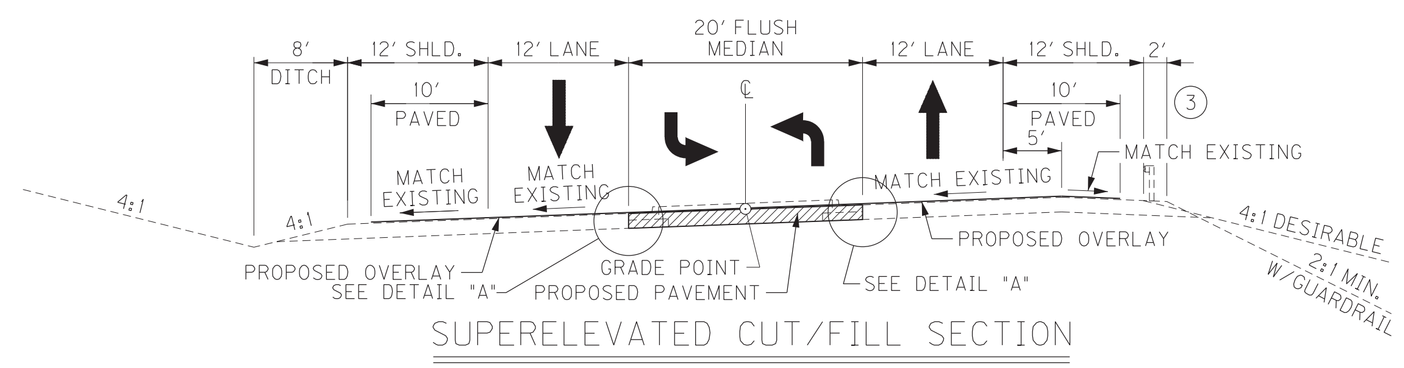

SUPERELEVATED CUT/FILL SECTION

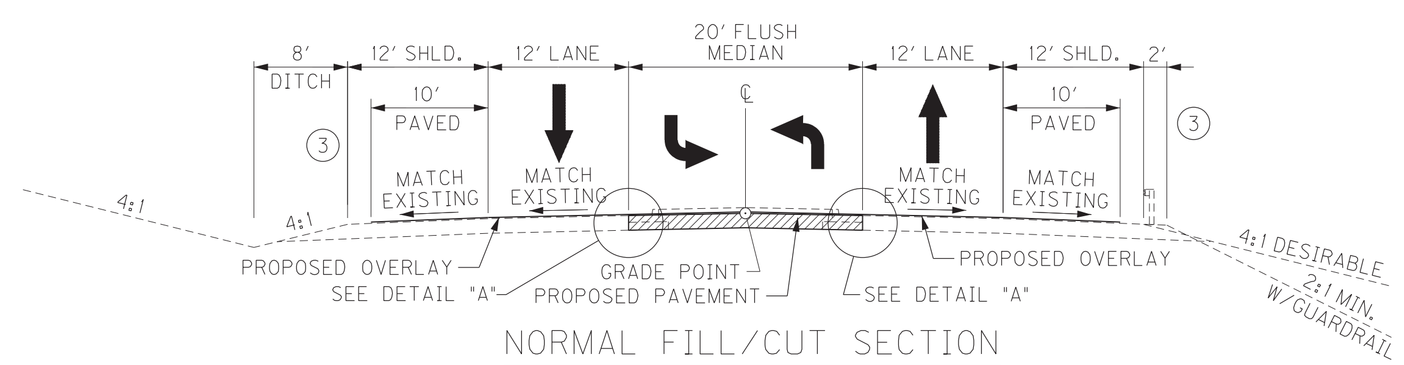

NORMAL FILL/CUT SECTION

US 231

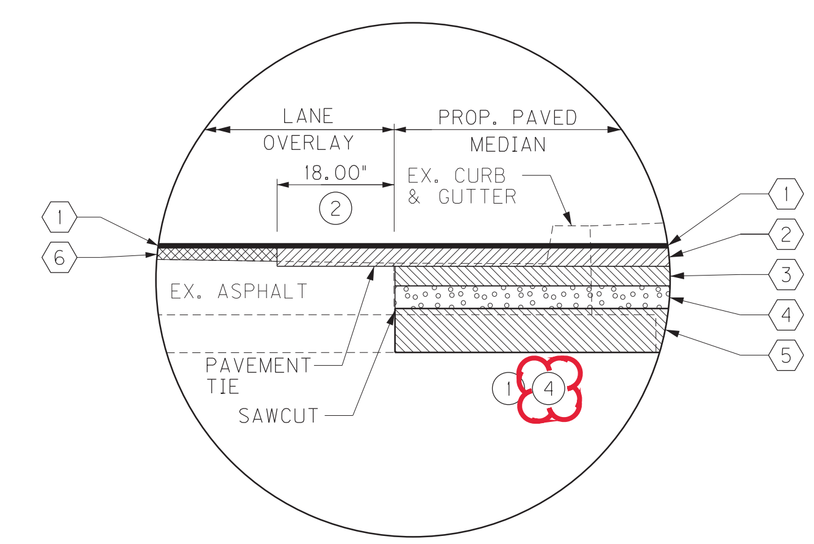

DETAIL "A"

NOT TO SCALE

1. 1.50" CL2 ASPH SURF 0.38D PG64-22
2. 2.50" CL2 ASPH BASE 0.75D PG64-22
3. 3.00" CL2 ASPH BASE 0.75D PG64-22
4. 6.00" CSB
5. 15.00" CRUSHED AGGREGATE SIZE NO. 23
6. LEVELING AND WEDGING PG64-22 (AS REQUIRED)

NOTES

1. ROCK ROADBED (CRUSHED AGGREGATE SIZE NO. 23) SHALL BE WRAPPED IN GEOTEXTILE FABRIC CLASS 2.
2. PAVEMENT TIE SHALL BE INCIDENTAL TO ASPHALT CONSTRUCTION.
3. A MINIMUM OF 2' OF SHOULDER SHALL BE PRESENT BEYOND THE FACE OF ALL NEW GUARDRAIL.
4. REMOVAL OF MATERIAL NEEDED TO REACH PROPOSED ROCK ROADBED DEPTH IS INCIDENTAL TO MEDIAN REMOVAL QUANTITIES.

US 231 & NATCHER PARKWAY INTERCHANGE
TYPICAL SECTIONS
US 231

POWER INROADS V8.11.9.3971 E-SHEET NAME: USER: USJH673619 DATE PLOTTED: March 10, 2021 FILE NAME: J:\187414 - US 231 AND NATCHER PARKWAY - BUTLER COUNTY\PHASE 2 DESIGN\CADD\TYPICAL SECTIONS\R00200TS.DGN

COUNTY OF	ITEM NO.	SHEET NO.
BUTLER	3-2042.30	R2B

TYPICAL SECTIONS

10 0 10 20 30

GRAPHIC SCALE IN FEET

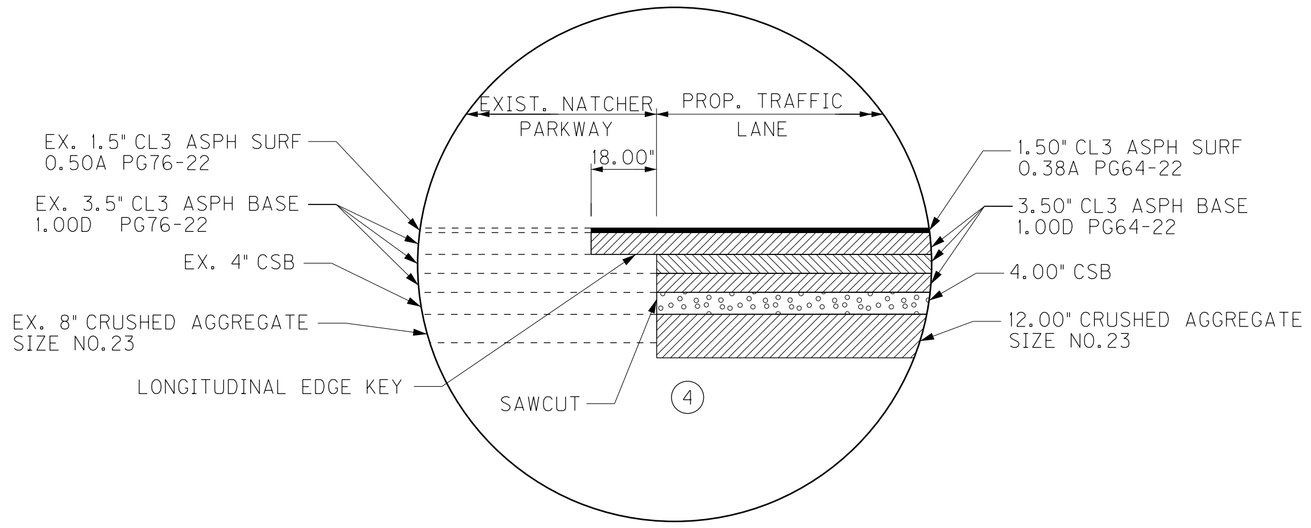

DETAIL "A"

NOT TO SCALE

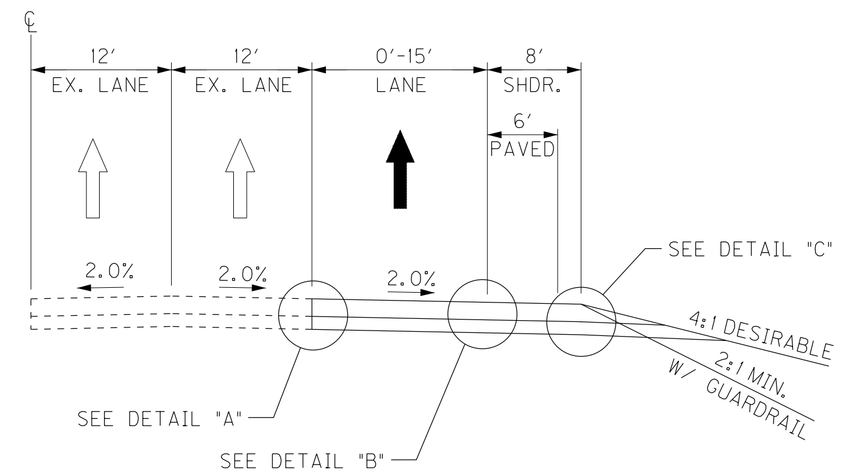

NORMAL CUT/FILL SECTION

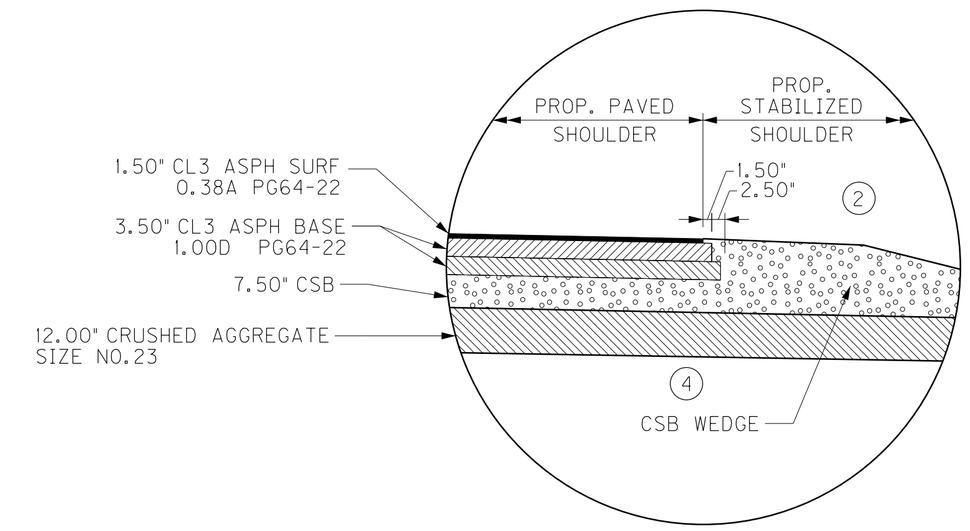

DETAIL "C"

NOT TO SCALE

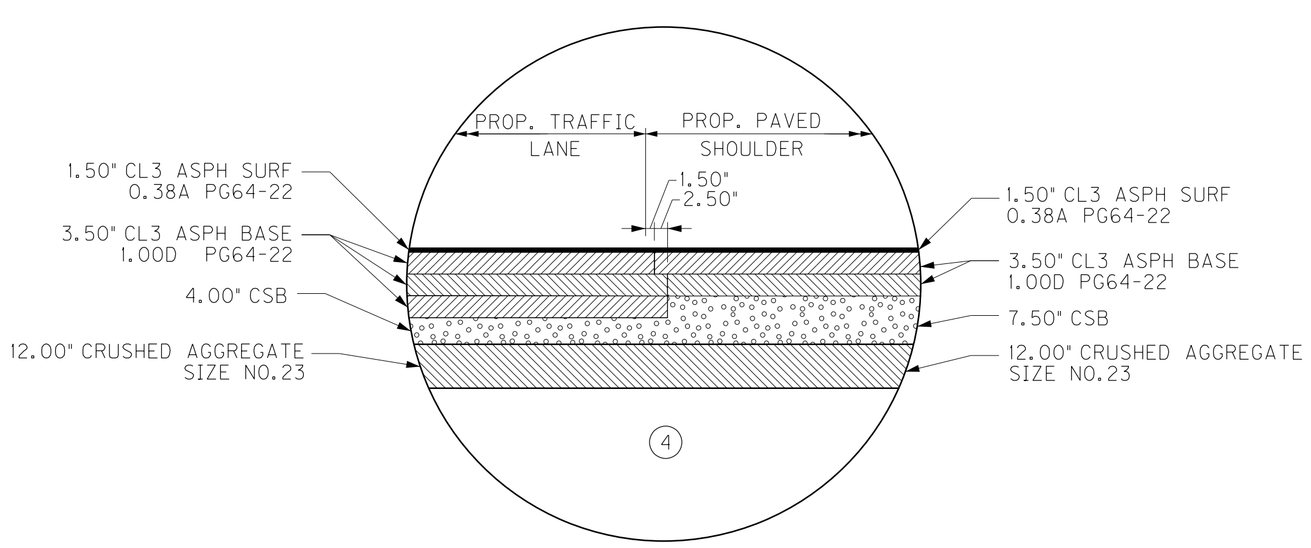

DETAIL "B"

NOT TO SCALE

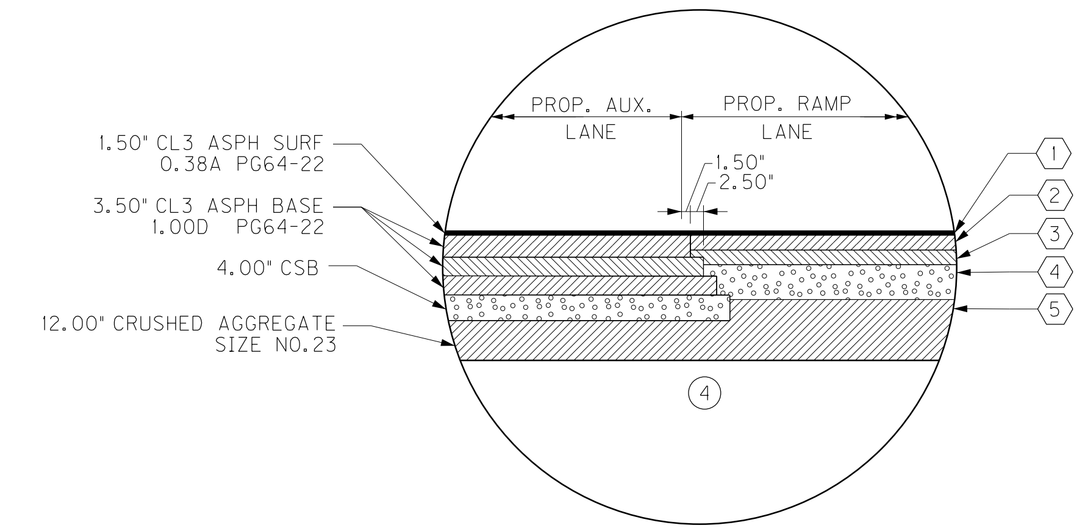

RAMP TIE-IN DETAIL

NOT TO SCALE

RAMP "A" STA 105+14
RAMP "B" STA 210+32
RAMP "C" STA 306+74
RAMP "D" STA 411+67

NOTES

1. SEE CROSS SECTIONS FOR SLOPES OUTSIDE LIMITS OF THE SHOULDERS.
2. ASPHALT SEAL REQUIRED FROM OUTSIDE EDGE OF PAVED SHOULDER TO A POINT 2 FEET DOWN THE DITCH OR FILL SLOPE. TWO APPLICATIONS OF THE FOLLOWING:
   ASPHALT SEAL COAT @ 2.40 LBS. / SQ. YD.
   ASPHALT SEAL AGGREGATE @ 20 LBS. / SQ. YD.
3. SUPERELEVATED SHOULDER TO BE CONSTRUCTED TO SUPERELEVATION RATE. AT NO TIME WILL THE SLOPE BE FLATTER THAN THE SLOPE INDICATED FOR THE NORMAL SLOPE.
4. ROCK ROADBED (CRUSHED AGGREGATE SIZE NO. 23) SHALL BE WRAPPED IN GEOTEXTILE FABRIC CLASS 2.

1. 1.50" CL2 ASPH SURF 0.38D PG64-22
2. 2.50" CL2 ASPH BASE 0.75D PG64-22
3. 3.00" CL2 ASPH BASE 0.75D PG64-22
4. 6.00" CSB
5. 15.00" CRUSHED AGGREGATE SIZE NO. 23

US 231 & NATCHER PARKWAY INTERCHANGE
TYPICAL SECTIONS
NATCHER PARKWAY

FILE NAME: J:\187414 - US 231 AND NATCHER PARKWAY - BUTLER COUNTY\PHASE 2 DESIGN\PDFS\03-10-2021 LETTING UPDATES\R2B.DGN
USER: USJH673619
DATE PLOTTED: March 11, 2021
E-SHEET NAME:
POWER INROADS V8.11.9.397

COUNTY OF	ITEM NO.	SHEET NO.
BUTLER	3-2042.30	R2B

REVISED 3-11-2021

TYPICAL SECTIONS

10 0 10 20 30

GRAPHIC SCALE IN FEET

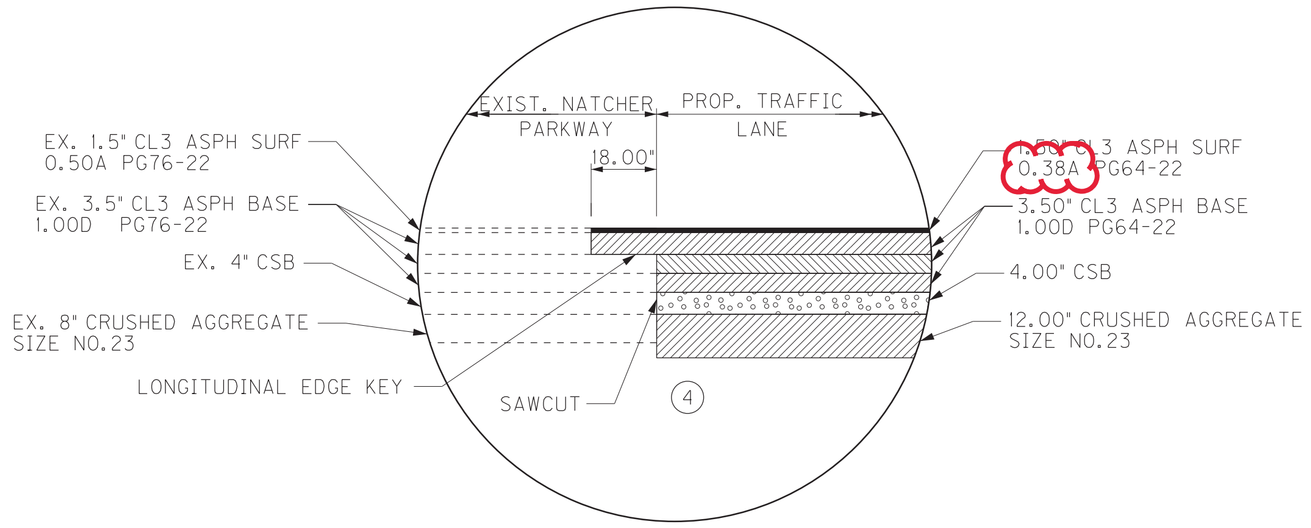

DETAIL "A"

NOT TO SCALE

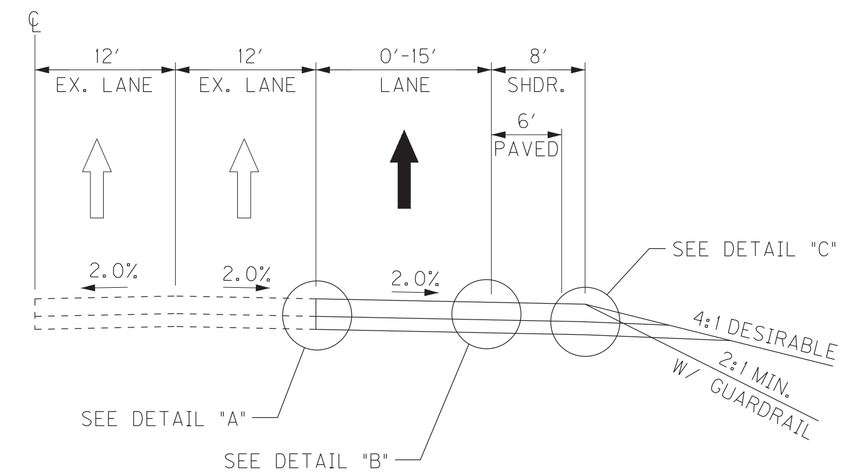

NORMAL CUT/FILL SECTION

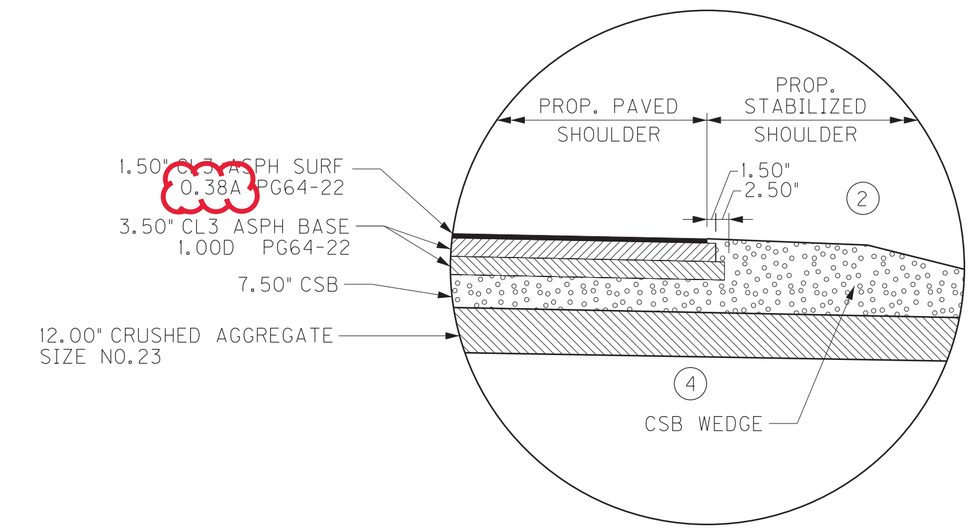

DETAIL "C"

NOT TO SCALE

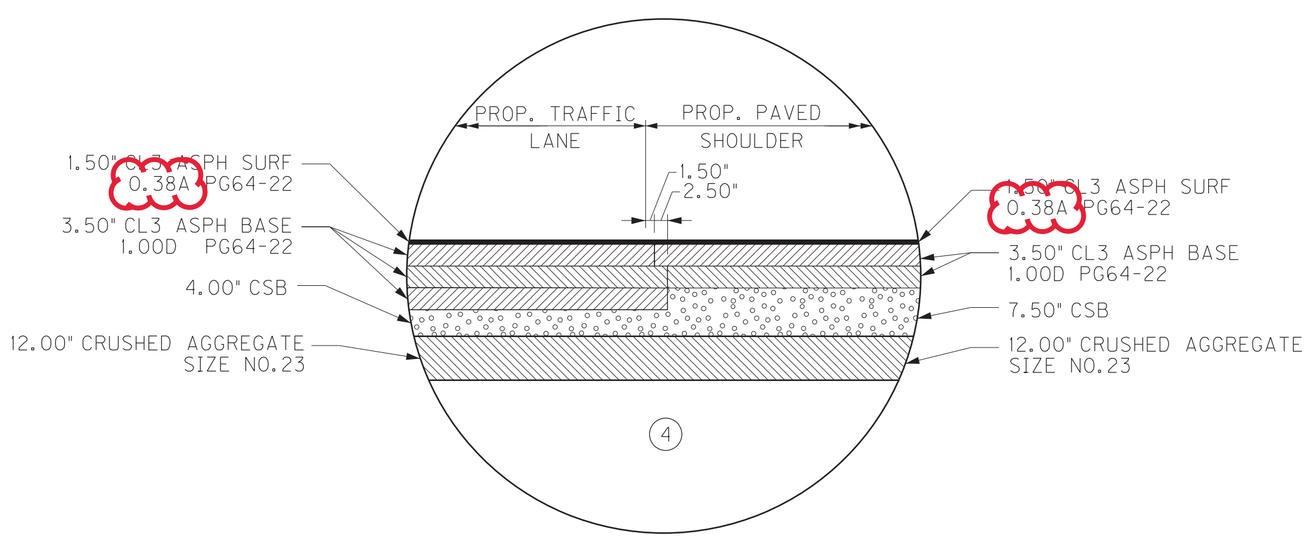

DETAIL "B"

NOT TO SCALE

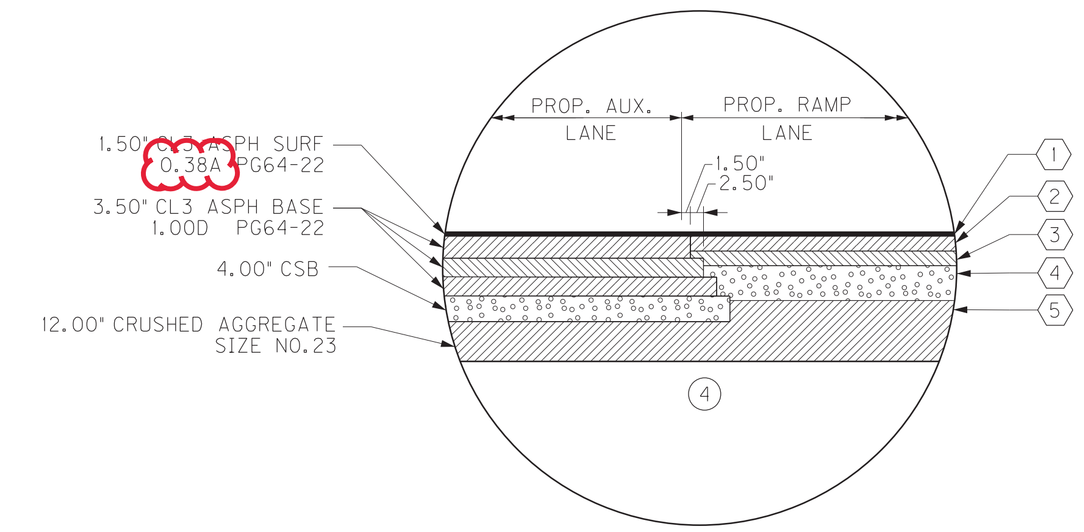

RAMP TIE-IN DETAIL

NOT TO SCALE

RAMP "A" STA 105+14
RAMP "B" STA 210+32
RAMP "C" STA 306+74
RAMP "D" STA 411+67

NOTES

1. SEE CROSS SECTIONS FOR SLOPES OUTSIDE LIMITS OF THE SHOULDERS.
2. ASPHALT SEAL REQUIRED FROM OUTSIDE EDGE OF PAVED SHOULDER TO A POINT 2 FEET DOWN THE DITCH OR FILL SLOPE. TWO APPLICATIONS OF THE FOLLOWING:
   ASPHALT SEAL COAT @ 2.40 LBS. / SQ. YD.
   ASPHALT SEAL AGGREGATE @ 20 LBS. / SQ. YD.
3. SUPERELEVATED SHOULDER TO BE CONSTRUCTED TO SUPERELEVATION RATE. AT NO TIME WILL THE SLOPE BE FLATTER THAN THE SLOPE INDICATED FOR THE NORMAL SLOPE.
4. ROCK ROADBED (CRUSHED AGGREGATE SIZE NO. 23) SHALL BE WRAPPED IN GEOTEXTILE FABRIC CLASS 2.

1. 1.50" CL2 ASPH SURF 0.38D PG64-22
2. 2.50" CL2 ASPH BASE 0.75D PG64-22
3. 3.00" CL2 ASPH BASE 0.75D PG64-22
4. 6.00" CSB
5. 15.00" CRUSHED AGGREGATE SIZE NO. 23

US 231 & NATCHER PARKWAY INTERCHANGE
TYPICAL SECTIONS
NATCHER PARKWAY

FILE NAME: J:\187414 - US 231 AND NATCHER PARKWAY - BUTLER COUNTY\PHASE 2 DESIGN\PDFS\03-10-2021 LETTING UPDATES\R2B.DGN
USER: USJH673619
DATE PLOTTED: March 11, 2021
E-SHEET NAME:
POWER INROADS V8.11.9.397

COUNTY OF	ITEM NO.	SHEET NO.
BUTLER	3-2042.30	R2D

GENERAL SUMMARY (SHEET 1 OF 2)

ITEM	DESCRIPTION	NOTES	UNIT	US 231	NATCHER PARKWAY/ RAMPS	TEMPORARY CONSTRUCTION											TOTAL PROJECT
00021	DRAINAGE BLANKET-EMBANKMENT		CUYD	-	1,943	-											1,943
00078	CRUSHED AGGREGATE SIZE NO 2	6	TONS	-	12,752	-											12,752
01000	PERFORATED PIPE-4 IN		LF	-	89	-											89
01010	NON-PERFORATED PIPE-4 IN		LF	-	16	-											16
01028	PERF PIPE HEADWALL TY 3-4 IN		EACH	-	1	-											1
01032	PERF PIPE HEADWALL TY 4-4 IN		EACH	-	1	-											1
01310	REMOVE PIPE	2	LF	47.1	71.5	-											118.6
01314	PLUG PIPE		EACH	-	1	-											1
01584	CAP DROP BOX INLET	2	EACH	-	1	-											1
01585	REMOVE DROP BOX INLET		EACH	1	-	-											1
01705	REMOVE CURB & GUTTER BOX INLET		EACH	3	-	-											3
01717	FILL AND CAP INLET		EACH	1	-	-											1
01718	REMOVE INLET	10	EACH	2	3	-											5
01825	ISLAND CURB AND GUTTER		LF	102	-	-											102
01982	DELINEATOR FOR GUARDRAIL MONO DIRECTIONAL WHITE		EACH	-	73	-											73
01983	DELINEATOR FOR GUARDRAIL MONO DIRECTIONAL YELLOW		EACH	-	27	-											27
01987	DELINEATOR FOR GUARDRAIL BI DIRECTIONAL WHITE		EACH	7	-	-											7
02091	REMOVE PAVEMENT		SQYD	455	1,576	-											2,031
02159	TEMP DITCH	7	LF	-	-	6,377											6,377
02160	CLEAN TEMP DITCH	7	LF	-	-	3,189											3,189
02200	ROADWAY EXCAVATION	1	CUYD	1,337	226,427	-											227,764
02223	GRANULAR EMBANKMENT	22	CUYD	-	26,517	-											26,517
02242	WATER	4	MGAL	-	-	-											200
02262	FENCE-WOVEN WIRE TYPE 1		LF	1,380	4,115	-											5,495
02265	REMOVE FENCE		LF	-	4,979	-											4,979
02363	GUARDRAIL CONNECTOR TO BRIDGE END TY A		LF	4	-	-											4
02367	GUARDRAIL END TREATMENT TYPE 1		EACH	2	-	-											2
02369	GUARDRAIL END TREATMENT TYPE 2A		EACH	-	4	-											4
02381	REMOVE GUARDRAIL	8	LF	1,507	8,490	-											9,997
02391	GUARDRAIL END TREATMENT TYPE 4A		EACH	3	4	-											7
02429	RIGHT-OF-WAY MONUMENT TYPE 1		EACH	6	15	-											21
02432	WITNESS POST	11	EACH	-	-	-											3
02483	CHANNEL LINING CLASS II	5	TON	787	2,284	-											3,071
02484	CHANNEL LINING CLASS III		TON	-	1,183	-											1,183
02545	CLEARING AND GRUBBING	15,18	LS	-	-	-											1
02562	TEMPORARY SIGNS	3	SQFT	-	-	487											487
02568	MOBILIZATION		LS	-	-	-											1
02569	DEMOBILIZATION		LS	-	-	-											1
02585	EDGE KEY		LF	47	-	-											47
02603	FABRIC-GEOTEXTILE CLASS 2	16	SQYD	7,312	84,273	-											91,585
02607	FABRIC-GEOTEXTILE CLASS 2 FOR PIPE	9	SQYD	87	5,673	-											5,760
02625	REMOVE HEADWALL	21	EACH	7	12	-											19
02650	MAINTAIN & CONTROL TRAFFIC	3	LS	-	-	-											1
02653	LANE CLOSURE		EACH	-	-	2											2
02671	PORTABLE CHANGEABLE MESSAGE SIGN	7	EACH	-	-	4											4
02690	SAFELOADING		CUYD	24.4	-	-											24.4
02696	SHOULDER RUMBLE STRIPS		LF	7,456	13,868	-											21,324
02701	TEMP SILT FENCE		LF	-	-	6,377											6,377
02703	SILT TRAP TYPE A		EACH	-	-	-											34
02704	SILT TRAP TYPE B		EACH	-	-	-											34
02705	SILT TRAP TYPE C		EACH	-	-	-											34
02706	CLEAN SILT TRAP TYPE A		EACH	-	-	-											34
02707	CLEAN SILT TRAP TYPE B		EACH	-	-	-											34
02708	CLEAN SILT TRAP TYPE C		EACH	-	-	-											34
02726	STAKING		LS	-	-	-											1

NOTES:

1. THE CONTRACTOR IS ADVISED THAT THE TOTAL EARTHWORK QUANTITIES SHOWN ARE FOR INFORMATION PURPOSES ONLY. ASSUMPTIONS FOR SHRINKAGE AND SWELL FACTORS ARE THE RESPONSIBILITY OF THE CONTRACTOR.

   EXCAVATION:

   174,650 CU. YD. COMMON
   685 CU. YD. SURFACE DITCHES
   6,687 CU. YD. ROCK
   20,606 CU. YD. EMBANKMENT BENCHES
   25,136 CU. YD. TRANSVERSE BENCHES

   227,764 CU. YD. TOTAL EXCAVATION

   EMBANKMENT:

   170,276 CU. YD. EMBANKMENT
   20,606 CU. YD. EMBANKMENT BENCHES
   25,136 CU. YD. TRANSVERSE BENCHES
   2,512 CU. YD. SOIL REFILL

   218,530 CU. YD. TOTAL EMBANKMENT

   EXCESS EXCAVATION: 9,234 CU. YD.

2. FROM PIPE DRAINAGE SUMMARY.
3. FOR TEMPORARY CONSTRUCTION.
4. FOR CONTROLLING DUST CAUSED BY MAINTAINING TRAFFIC ONLY.
5. INCLUDES 221 TONS FROM PIPE DRAINAGE SUMMARY AND 2,850 TONS FOR DITCHES.
6. INCLUDES 2 TONS FOR PERFORATED PIPE HEADWALLS, 2,750 TONS FOR EMBANKMENT BENCHES WHERE WATER IS ENCOUNTERED, AND 10,000 TONS FOR A WORKING PLATFORM - SEE GEOTECHNICAL NOTES.
7. FOR TEMPORARY CONSTRUCTION AND MAINTENANCE OF TRAFFIC ONLY.
8. INCLUDES REMOVAL OF END TREATMENTS.
9. FOR WRAPPING PIPE TRENCH BACKFILL.
10. FOR REMOVAL OF FLUME INLET.
11. AS NEEDED, AS DIRECTED BY THE ENGINEER.
12. FOR DITCH SLOPES GREATER THAN 15%. USE 0.50 CUBIC YARDS OF HIGH SLUMP 3,000 PSI GROUT PER CUBIC YARD OF CHANNEL LINING CLASS III (MOD.)
13. SEE SHEET T10 FOR PERMANENT SIGNING QUANTITIES.
14. SEE SHEET T10 FOR PERMANENT STRIPING QUANTITIES.
15. REMOVAL OF EXISTING PIPES TO BE INCIDENTAL TO CLEARING AND GRUBBING OR EXISTING RAMP GRADING, UNLESS OTHERWISE NOTED.
16. INCLUDES 66,461 SQYD FOR PLACEMENT UNDER ROCK ROADBED, 8,924 SQYD FOR EMBANKMENT BENCHES WHERE WATER IS ENCOUNTERED, AND 16,200 SQYD FOR WORKING PLATFORM - SEE GEOTECHNICAL NOTES.
17. SEE SHEET T1 FOR LIGHTING QUANTITIES.
18. APPROXIMATELY 35.0 ACRES.
19. INCLUDES 1,764 LF FOR PROPOSED CULVERT AND STORM SEWER PIPES LESS THAN 54" AND 561 LF FROM PIPE DRAINAGE SUMMARY FOR INSPECTING EXISTING PIPE PRIOR TO CONSTRUCTION.
20. SEE SHEET S1 FOR STRUCTURE QUANTITIES.
21. INCLUDES 13 HEADWALLS FROM PIPE DRAINAGE SUMMARY.
22. FOR PORTION OF RAMP EMBANKMENTS CONSTRUCTED DURING PHASE 4. SEE GEOTECHNICAL NOTES.
23. INCLUDES REMOVAL OF MATERIAL NECESSARY TO REACH PROPOSED ROCK ROADBED DEPTH.

FILE NAME: J:\187414 - US 231 AND NATCHER PARKWAY - BUTLER COUNTY\PHASE 2 DESIGN\CADD\SUMMARIES\GENERAL SUMMARY.DGN
USER: USJH673619
DATE PLOTTED: March 10, 2021
E-SHEET NAME:
Power InRoads v8.11.9.397

COUNTY OF	ITEM NO.	SHEET NO.
BUTLER	3-2042.30	R2D

GENERAL SUMMARY (SHEET 1 OF 2)

ITEM	DESCRIPTION	NOTES	UNIT	US 231	NATCHER PARKWAY/ RAMPS	TEMPORARY CONSTRUCTION										TOTAL PROJECT
00021	DRAINAGE BLANKET-EMBANKMENT		CUYD	-	1,943	-										1,943
00078	CRUSHED AGGREGATE SIZE NO 2	6	TONS	-	12,752	-										12,752
01000	PERFORATED PIPE-4 IN		LF	-	89	-										89
01010	NON-PERFORATED PIPE-4 IN		LF	-	16	-										16
01028	PERF PIPE HEADWALL TY 3-4 IN		EACH	-	1	-										1
01032	PERF PIPE HEADWALL TY 4-4 IN		EACH	-	1	-										1
01310	REMOVE PIPE	2	LF	47.1	71.5	-										118.6
01314	PLUG PIPE		EACH	-	1	-										1
01584	CAP DROP BOX INLET	2	EACH	-	1	-										1
01585	REMOVE DROP BOX INLET		EACH	1	-	-										1
01705	REMOVE CURB & GUTTER BOX INLET		EACH	3	-	-										3
01717	FILL AND CAP INLET		EACH	1	-	-										1
01718	REMOVE INLET	10	EACH	2	3	-										5
01825	ISLAND CURB AND GUTTER		LF	102	-	-										102
01982	DELINEATOR FOR GUARDRAIL MONO DIRECTIONAL WHITE		EACH	-	73	-										73
01983	DELINEATOR FOR GUARDRAIL MONO DIRECTIONAL YELLOW		EACH	-	27	-										27
01987	DELINEATOR FOR GUARDRAIL BI DIRECTIONAL WHITE		EACH	7	-	-										7
02091	REMOVE PAVEMENT		SQYD	455	1,576	-										2,031
02159	TEMP DITCH	7	LF	-	-	6,377										6,377
02160	CLEAN TEMP DITCH	7	LF	-	-	3,189										3,189
02200	ROADWAY EXCAVATION	1	CUYD	1,337	226,427	-										227,764
02223	GRANULAR EMBANKMENT	22	CUYD	-	26,517	-										26,517
02242	WATER	4	MGAL	-	-	-										200
02262	FENCE-WOVEN WIRE TYPE 1		LF	1,380	4,115	-										5,495
02265	REMOVE FENCE		LF	-	4,979	-										4,979
02363	GUARDRAIL CONNECTOR TO BRIDGE END TY A		LF	4	-	-										4
02367	GUARDRAIL END TREATMENT TYPE 1		EACH	2	-	-										2
02369	GUARDRAIL END TREATMENT TYPE 2A		EACH	-	4	-										4
02381	REMOVE GUARDRAIL	8	LF	1,507	8,490	-										9,997
02391	GUARDRAIL END TREATMENT TYPE 4A		EACH	3	4	-										7
02429	RIGHT-OF-WAY MONUMENT TYPE 1		EACH	6	15	-										21
02432	WITNESS POST	11	EACH	-	-	-										3
02483	CHANNEL LINING CLASS II	5	TON	787	2,284	-										3,071
02484	CHANNEL LINING CLASS III		TON	-	1,183	-										1,183
02545	CLEARING AND GRUBBING	15,18	LS	-	-	-										1
02562	TEMPORARY SIGNS	3	SQFT	-	-	487										487
02568	MOBILIZATION		LS	-	-	-										1
02569	DEMOBILIZATION		LS	-	-	-										1
02585	EDGE KEY		LF	47	-	-										47
02603	FABRIC-GEOTEXTILE CLASS 2	16	SQYD	7,312	84,273	-										91,585
02607	FABRIC-GEOTEXTILE CLASS 2 FOR PIPE	9	SQYD	87	5,673	-										5,760
02625	REMOVE HEADWALL	21	EACH	7	12	-										19
02650	MAINTAIN & CONTROL TRAFFIC	3	LS	-	-	-										1
02653	LANE CLOSURE		EACH	-	-	2										2
02671	PORTABLE CHANGEABLE MESSAGE SIGN	7	EACH	-	-	4										4
02690	SAFELOADING		CUYD	24.4	-	-										24.4
02696	SHOULDER RUMBLE STRIPS		LF	7,456	13,868	-										21,324
02701	TEMP SILT FENCE		LF	-	-	6,377										6,377
02703	SILT TRAP TYPE A		EACH	-	-	-										34
02704	SILT TRAP TYPE B		EACH	-	-	-										34
02705	SILT TRAP TYPE C		EACH	-	-	-										34
02706	CLEAN SILT TRAP TYPE A		EACH	-	-	-										34
02707	CLEAN SILT TRAP TYPE B		EACH	-	-	-										34
02708	CLEAN SILT TRAP TYPE C		EACH	-	-	-										34
02726	STAKING		LS	-	-	-										1

REVISED 3-11-2021

NOTES:

(1) THE CONTRACTOR IS ADVISED THAT THE TOTAL EARTHWORK QUANTITIES SHOWN ARE FOR INFORMATION PURPOSES ONLY. ASSUMPTIONS FOR SHRINKAGE AND SWELL FACTORS ARE THE RESPONSIBILITY OF THE CONTRACTOR.

EXCAVATION:

174,650	CU. YD. COMMON
685	CU. YD. SURFACE DITCHES
6,687	CU. YD. ROCK
20,606	CU. YD. EMBANKMENT BENCHES
25,136	CU. YD. TRANSVERSE BENCHES
227,764	CU. YD. TOTAL EXCAVATION

EMBANKMENT:

170,276	CU. YD. EMBANKMENT
20,606	CU. YD. EMBANKMENT BENCHES
25,136	CU. YD. TRANSVERSE BENCHES
2,512	CU. YD. SOIL REFILL
218,530	CU. YD. TOTAL EMBANKMENT

EXCESS EXCAVATION: 9,234 CU. YD.

(2) FROM PIPE DRAINAGE SUMMARY.

(3) FOR TEMPORARY CONSTRUCTION.

(4) FOR CONTROLLING DUST CAUSED BY MAINTAINING TRAFFIC ONLY.

(5) INCLUDES 221 TONS FROM PIPE DRAINAGE SUMMARY AND 2,850 TONS FOR DITCHES.

(6) INCLUDES 2 TONS FOR PERFORATED PIPE HEADWALLS, 2,750 TONS FOR EMBANKMENT BENCHES WHERE WATER IS ENCOUNTERED, AND 10,000 TONS FOR A WORKING PLATFORM - SEE GEOTECHNICAL NOTES.

(7) FOR TEMPORARY CONSTRUCTION AND MAINTENANCE OF TRAFFIC ONLY.

(8) INCLUDES REMOVAL OF END TREATMENTS.

(9) FOR WRAPPING PIPE TRENCH BACKFILL.

(10) FOR REMOVAL OF FLUME INLET.

(11) AS NEEDED, AS DIRECTED BY THE ENGINEER.

(12) FOR DITCH SLOPES GREATER THAN 15%. USE 0.50 CUBIC YARDS OF HIGH SLUMP 3,000 PSI GROUT PER CUBIC YARD OF CHANNEL LINING CLASS III (MOD.)

(13) SEE SHEET T10 FOR PERMANENT SIGNING QUANTITIES.

(14) SEE SHEET T10 FOR PERMANENT STRIPING QUANTITIES.

(15) REMOVAL OF EXISTING PIPES TO BE INCIDENTAL TO CLEARING AND GRUBBING OR EXISTING RAMP GRADING, UNLESS OTHERWISE NOTED.

(16) INCLUDES 66,461 SQYD FOR PLACEMENT UNDER ROCK ROADBED, 8,924 SQYD FOR EMBANKMENT BENCHES WHERE WATER IS ENCOUNTERED, AND 16,200 SQYD FOR WORKING PLATFORM - SEE GEOTECHNICAL NOTES.

(17) SEE SHEET T1 FOR LIGHTING QUANTITIES.

(18) APPROXIMATELY 35.0 ACRES.

(19) INCLUDES 1,764 LF FOR PROPOSED CULVERT AND STORM SEWER PIPES LESS THAN 54" AND 561 LF FROM PIPE DRAINAGE SUMMARY FOR INSPECTING EXISTING PIPE PRIOR TO CONSTRUCTION.

(20) SEE SHEET S1 FOR STRUCTURE QUANTITIES.

(21) INCLUDES 13 HEADWALLS FROM PIPE DRAINAGE SUMMARY.

(22) FOR PORTION OF RAMP EMBANKMENTS CONSTRUCTED DURING PHASE 4. SEE GEOTECHNICAL NOTES.

(23) INCLUDES REMOVAL OF MATERIAL NECESSARY TO REACH PROPOSED ROCK ROADBED DEPTH.

GENERAL SUMMARY
SHEET 1 OF 2

FILE NAME: J:\187414 - US 231 AND NATCHER PARKWAY - BUTLER COUNTY\PHASE 2 DESIGN\CADD\SUMMARIES\GENERAL SUMMARY.DGN
USER: USJH673619
DATE PLOTTED: March 10, 2021
E-SHEET NAME:
Power InRoads v8.11.9.397

COUNTY OF	ITEM NO.	SHEET NO.
BUTLER	3-2042.30	R2E

GENERAL SUMMARY (SHEET 2 OF 2)

ITEM	DESCRIPTION	NOTES	UNIT	US 231	NATCHER PARKWAY/ RAMPS	TEMPORARY CONSTRUCTION										TOTAL PROJECT
02775	ARROW PANEL	7	EACH	-	-	2										2
05950	EROSION CONTROL BLANKET		SQYD	339	13,249	-										13,588
05952	TEMP MULCH		SQYD	-	-	-										81,233
05953	TEMP SEEDING AND PROTECTION		SQYD	-	-	-										108,311
05963	INITIAL FERTILIZER		TON	-	-	-										4
05964	MAINTENANCE FERTILIZER		TON	-	-	-										7
05985	SEEDING AND PROTECTION		SQYD	-	-	-										136,521
05992	AGRICULTURAL LIMESTONE		TON	-	-	-										101
06510	PAVE STRIPING-TEMP PAINT-4 IN	3	LF	-	-	25,090										25,090
06550	PAVE STRIPING-TEMP REM TAPE-W	3	LF	-	-	9,003										9,003
06551	PAVE STRIPING-TEMP REM TAPE-Y	3	LF	-	-	289										289
10020NS	FUEL ADJUSTMENT		DOLL	-	-	-										125,733
10030NS	ASPHALT ADJUSTMENT		DOLL	-	-	-										61,439
20166ES810	TEMPORARY PIPE	3	LF	-	-	84										84
20191ED	OBJECT MARKER TY 3		EACH	2	-	-										2
20410ED	MAINTAIN LIGHTING		LS	-	-	-										1
20550ND	SAWCUT PAVEMENT		LF	1,443	7,420	-										8,863
20911ED	HIGH SLUMP 3000 PSI GROUT	12	CUYD	-	134	-										134
21289ED	LONGITUDINAL EDGE KEY		LF	-	4,777	-										4,777
21802EN	G/R STEEL W BEAM-S FACE (7 FT POST)		LF	715	3,990	-										4,705
22665EN	REMOVE NON-MOUNTABLE MEDIAN	23	SQYD	3,025	-	-										3,025
23131ER701	PIPELINE VIDEO INSPECTION	19	LF	101	2,224	-										2,325
23839EC	REMOVE CONCRETE MEDIAN	23	SQYD	121	-	-										121
23864EC	CHANNEL LINING CLASS III-MOD	12	TONS	-	400	-										400
24731EC	REMOVE AND RESET (HEADWALL)	2	EACH	2	-	-										2
-	SIGNING QUANTITIES	13	-													-
-	STRIPING QUANTITIES	14	-													-
-	LIGHTING QUANTITIES	17	-													-
-	STRUCTURE QUANTITIES	20	-													-

NOTES:

(1) THE CONTRACTOR IS ADVISED THAT THE TOTAL EARTHWORK QUANTITIES SHOWN ARE FOR INFORMATION PURPOSES ONLY. ASSUMPTIONS FOR SHRINKAGE AND SWELL FACTORS ARE THE RESPONSIBILITY OF THE CONTRACTOR.

EXCAVATION:

174,650	CU. YD. COMMON
685	CU. YD. SURFACE DITCHES
6,687	CU. YD. ROCK
20,606	CU. YD. EMBANKMENT BENCHES
25,136	CU. YD. TRANSVERSE BENCHES
227,764	CU. YD. TOTAL EXCAVATION

EMBANKMENT:

170,276	CU. YD. EMBANKMENT
20,606	CU. YD. EMBANKMENT BENCHES
25,136	CU. YD. TRANSVERSE BENCHES
2,512	CU. YD. SOIL REFILL
218,530	CU. YD. TOTAL EMBANKMENT

EXCESS EXCAVATION: 9,234 CU. YD.

(2) FROM PIPE DRAINAGE SUMMARY.

(3) FOR TEMPORARY CONSTRUCTION.

(4) FOR CONTROLLING DUST CAUSED BY MAINTAINING TRAFFIC ONLY.

(5) INCLUDES 221 TONS FROM PIPE DRAINAGE SUMMARY AND 2,850 TONS FOR DITCHES.

(6) INCLUDES 2 TONS FOR PERFORATED PIPE HEADWALLS, 2,750 TONS FOR EMBANKMENT BENCHES WHERE WATER IS ENCOUNTERED, AND 10,000 TONS FOR A WORKING PLATFORM - SEE GEOTECHNICAL NOTES.

(7) FOR TEMPORARY CONSTRUCTION AND MAINTENANCE OF TRAFFIC ONLY.

(8) INCLUDES REMOVAL OF END TREATMENTS.

(9) FOR WRAPPING PIPE TRENCH BACKFILL.

(10) FOR REMOVAL OF FLUME INLET.

(11) AS NEEDED, AS DIRECTED BY THE ENGINEER.

(12) FOR DITCH SLOPES GREATER THAN 15%. USE 0.50 CUBIC YARDS OF HIGH SLUMP 3,000 PSI GROUT PER CUBIC YARD OF CHANNEL LINING CLASS III (MOD.)

(13) SEE SHEET T10 FOR PERMANENT SIGNING QUANTITIES.

(14) SEE SHEET T10 FOR PERMANENT STRIPING QUANTITIES.

(15) REMOVAL OF EXISTING PIPES TO BE INCIDENTAL TO CLEARING AND GRUBBING OR EXISTING RAMP GRADING, UNLESS OTHERWISE NOTED.

(16) INCLUDES 66,461 SQYD FOR PLACEMENT UNDER ROCK ROADBED, 8,924 SQYD FOR EMBANKMENT BENCHES WHERE WATER IS ENCOUNTERED, AND 16,200 SQYD FOR WORKING PLATFORM - SEE GEOTECHNICAL NOTES.

(17) SEE SHEET T1 FOR LIGHTING QUANTITIES.

(18) APPROXIMATELY 35.0 ACRES.

(19) INCLUDES 1,764 LF FOR PROPOSED CULVERT AND STORM SEWER PIPES LESS THAN 54" AND 561 LF FROM PIPE DRAINAGE SUMMARY FOR INSPECTING EXISTING PIPE PRIOR TO CONSTRUCTION.

(20) SEE SHEET S1 FOR STRUCTURE QUANTITIES.

(21) INCLUDES 13 HEADWALLS FROM PIPE DRAINAGE SUMMARY.

(22) FOR PORTION OF RAMP EMBANKMENTS CONSTRUCTED DURING PHASE 4. SEE GEOTECHNICAL NOTES.

(23) INCLUDES REMOVAL OF MATERIAL NECESSARY TO REACH PROPOSED ROCK ROADBED DEPTH.

GENERAL SUMMARY
SHEET 2 OF 2

FILE NAME: J:\187414 - US 231 AND NATCHER PARKWAY - BUTLER COUNTY\PHASE 2 DESIGN\CADD\SUMMARIES\GENERAL SUMMARY.DGN
USER: USJH673619
DATE PLOTTED: March 10, 2021
E-SHEET NAME:
Power InRoads v8.11.9.397

COUNTY OF	ITEM NO.	SHEET NO.
BUTLER	3-2042.30	R2E

GENERAL SUMMARY (SHEET 2 OF 2)

ITEM	DESCRIPTION	NOTES	UNIT	US 231	NATCHER PARKWAY/ RAMPS	TEMPORARY CONSTRUCTION										TOTAL PROJECT
02775	ARROW PANEL	7	EACH	-	-	2										2
05950	EROSION CONTROL BLANKET		SQYD	339	13,249	-										13,588
05952	TEMP MULCH		SQYD	-	-	-										81,233
05953	TEMP SEEDING AND PROTECTION		SQYD	-	-	-										108,311
05963	INITIAL FERTILIZER		TON	-	-	-										4
05964	MAINTENANCE FERTILIZER		TON	-	-	-										7
05985	SEEDING AND PROTECTION		SQYD	-	-	-										136,521
05992	AGRICULTURAL LIMESTONE		TON	-	-	-										101
06510	PAVE STRIPING-TEMP PAINT-4 IN	3	LF	-	-	25,090										25,090
06550	PAVE STRIPING-TEMP REM TAPE-W	3	LF	-	-	9,003										9,003
06551	PAVE STRIPING-TEMP REM TAPE-Y	3	LF	-	-	289										289
10020NS	FUEL ADJUSTMENT		DOLL	-	-	-										125,733
10030NS	ASPHALT ADJUSTMENT		DOLL	-	-	-										61,439
20166ES810	TEMPORARY PIPE	3	LF	-	-	84										84
20191ED	OBJECT MARKER TY 3		EACH	2	-	-										2
20410ED	MAINTAIN LIGHTING		LS	-	-	-										1
20550ND	SAWCUT PAVEMENT		LF	1,443	7,420	-										8,863
20911ED	HIGH SLUMP 3000 PSI GROUT	12	CUYD	-	134	-										134
21289ED	LONGITUDINAL EDGE KEY		LF	-	4,777	-										4,777
21802EN	G/R STEEL W BEAM-S FACE (7 FT POST)		LF	715	3,990	-										4,705
22665EN	REMOVE NON-MOUNTABLE MEDIAN	23	SQYD	3,025	-	-										3,025
23131ER701	PIPELINE VIDEO INSPECTION	19	LF	101	2,224	-										2,325
23839EC	REMOVE CONCRETE MEDIAN	23	SQYD	121	-	-										121
23864EC	CHANNEL LINING CLASS III-MOD	12	TONS	-	400	-										400
24731EC	REMOVE AND RESET (HEADWALL)	2	EACH	2	-	-										2
-	SIGNING QUANTITIES	13	-													-
-	STRIPING QUANTITIES	14	-													-
-	LIGHTING QUANTITIES	17	-													-
-	STRUCTURE QUANTITIES	20	-													-

REVISED 3-11-2021

NOTES:

1. THE CONTRACTOR IS ADVISED THAT THE TOTAL EARTHWORK QUANTITIES SHOWN ARE FOR INFORMATION PURPOSES ONLY. ASSUMPTIONS FOR SHRINKAGE AND SWELL FACTORS ARE THE RESPONSIBILITY OF THE CONTRACTOR.

   EXCAVATION:

   174,650 CU. YD. COMMON
   685 CU. YD. SURFACE DITCHES
   6,687 CU. YD. ROCK
   20,606 CU. YD. EMBANKMENT BENCHES
   25,136 CU. YD. TRANSVERSE BENCHES

   227,764 CU. YD. TOTAL EXCAVATION

   EMBANKMENT:

   170,276 CU. YD. EMBANKMENT
   20,606 CU. YD. EMBANKMENT BENCHES
   25,136 CU. YD. TRANSVERSE BENCHES
   2,512 CU. YD. SOIL REFILL

   218,530 CU. YD. TOTAL EMBANKMENT

   EXCESS EXCAVATION: 9,234 CU. YD.
2. FROM PIPE DRAINAGE SUMMARY.
3. FOR TEMPORARY CONSTRUCTION.
4. FOR CONTROLLING DUST CAUSED BY MAINTAINING TRAFFIC ONLY.
5. INCLUDES 221 TONS FROM PIPE DRAINAGE SUMMARY AND 2,850 TONS FOR DITCHES.
6. INCLUDES 2 TONS FOR PERFORATED PIPE HEADWALLS, 2,750 TONS FOR EMBANKMENT BENCHES WHERE WATER IS ENCOUNTERED, AND 10,000 TONS FOR A WORKING PLATFORM - SEE GEOTECHNICAL NOTES.
7. FOR TEMPORARY CONSTRUCTION AND MAINTENANCE OF TRAFFIC ONLY.
8. INCLUDES REMOVAL OF END TREATMENTS.
9. FOR WRAPPING PIPE TRENCH BACKFILL.
10. FOR REMOVAL OF FLUME INLET.
11. AS NEEDED, AS DIRECTED BY THE ENGINEER.
12. FOR DITCH SLOPES GREATER THAN 15%. USE 0.50 CUBIC YARDS OF HIGH SLUMP 3,000 PSI GROUT PER CUBIC YARD OF CHANNEL LINING CLASS III (MOD.)
13. SEE SHEET T10 FOR PERMANENT SIGNING QUANTITIES.
14. SEE SHEET T10 FOR PERMANENT STRIPING QUANTITIES.
15. REMOVAL OF EXISTING PIPES TO BE INCIDENTAL TO CLEARING AND GRUBBING OR EXISTING RAMP GRADING, UNLESS OTHERWISE NOTED.
16. INCLUDES 66,461 SQYD FOR PLACEMENT UNDER ROCK ROADBED, 8,924 SQYD FOR EMBANKMENT BENCHES WHERE WATER IS ENCOUNTERED, AND 16,200 SQYD FOR WORKING PLATFORM - SEE GEOTECHNICAL NOTES.
17. SEE SHEET T1 FOR LIGHTING QUANTITIES.
18. APPROXIMATELY 35.0 ACRES.
19. INCLUDES 1,764 LF FOR PROPOSED CULVERT AND STORM SEWER PIPES LESS THAN 54" AND 561 LF FROM PIPE DRAINAGE SUMMARY FOR INSPECTING EXISTING PIPE PRIOR TO CONSTRUCTION.
20. SEE SHEET S1 FOR STRUCTURE QUANTITIES.
21. INCLUDES 13 HEADWALLS FROM PIPE DRAINAGE SUMMARY.
22. FOR PORTION OF RAMP EMBANKMENTS CONSTRUCTED DURING PHASE 4. SEE GEOTECHNICAL NOTES.
23. INCLUDES REMOVAL OF MATERIAL NECESSARY TO REACH PROPOSED ROCK ROADBED DEPTH.

GENERAL SUMMARY
SHEET 2 OF 2

FILE NAME: J:\187414 - US 231 AND NATCHER PARKWAY - BUTLER COUNTY\PHASE 2 DESIGN\CADD\SUMMARIES\GENERAL SUMMARY.DGN
USER: USJH673619
DATE PLOTTED: March 10, 2021
E-SHEET NAME:
Power InRoads v8.11.9.397

PAVING AREAS

ITEM	NOTES	DEPTH (inches)	US 231	NATCHER PARKWAY/ RAMPS										TOTAL PROJECT
			S	Q	U	A	R	E		Y	A	R	D	S
CRUSHED STONE BASE		4.00		8,152										8,152
CRUSHED STONE BASE		6.00	3,069	12,229										15,298
CRUSHED STONE BASE		7.50		3,595										3,595
CRUSHED STONE BASE		9.00		5,336										5,336
CRUSHED STONE BASE (WEDGE) (RAMP FULL DEPTH)	4	8.55		6,567										6,567
CRUSHED STONE BASE (WEDGE) (RAMP FULL DEPTH)	4	10.18		3,879										3,879
CRUSHED AGGREGATE SIZE NO 23	5	12.00		17,478										17,478
CRUSHED AGGREGATE SIZE NO 23	5	15.00	3,069	26,119										29,188
ASPHALT SEAL AGGREGATE				6,264										6,264
ASPHALT SEAL COAT				6,264										6,264
LEVELING & WEDGING PG64-22		0.50	2,500											2,500
CL3 ASPH BASE 1.00D PG64-22		3.50		30,720										30,720
CL2 ASPH BASE 0.75D PG64-22		2.50	3,813	17,090										20,903
CL2 ASPH BASE 0.75D PG64-22		3.00	3,069	11,970										15,039
CL2 ASPH SURF 0.38D PG64-22		1.50	24,871	16,960										41,831
CL3 ASPH SURF 0.38A PG64-22		1.50		11,218										11,218
ASPHALT MATERIAL FOR TACK			3,069	59,779										66,661
SAND FOR BLOTTER				28,374										32,187

PAVING SUMMARY

ITEM CODE	ITEM	NOTES	UNIT	US 231	NATCHER PARKWAY/ RAMPS				TOTAL PROJECT
00003	CRUSHED STONE BASE	1	TON	1,059	15,905				16,964
00080	CRUSHED AGGREGATE SIZE NO 23	1 5	TON	2,647	34,588				37,235
00100	ASPHALT SEAL AGGREGATE	2	TON		125				125
00103	ASPHALT SEAL COAT	3	TON		15				15
00190	LEVELING & WEDGING PG64-22		TON	69					69
00214	CL3 ASPH BASE 1.00D PG64-22		TON		5,914				5,914
00221	CL2 ASPH BASE 0.75D PG64-22		TON	1,031	4,325				5,356
00301	CL2 ASPH SURF 0.38D PG64-22		TON	2,052	1,399				3,451
22906ES403	CL3 ASPH SURF 0.38A PG64-22		TON		925				925
00356	ASPHALT MATERIAL FOR TACK	6	TON	3	25				28
02702	SAND FOR BLOTTER	7	TON	6	43				49

NOTES

ALL ASPHALT MIXTURES SHALL BE ESTIMATED AT 110 LBS. PER SQ. YD. PER INCH OF DEPTH, UNLESS NOTED OTHERWISE.

1. ESTIMATED AT 115 LBS. PER SQ. YD. PER INCH OF DEPTH.
2. ESTIMATED AT 20 LBS. PER SQ. YD. X 2 APPLICATIONS
3. ESTIMATED AT 2.40 LBS. PER SQ. YD. X 2 APPLICATIONS
4. DEPTH SHOWN IS APPROXIMATE EQUIVALENT AND IS BASED ON AVERAGE DEPTH THAT VARIES OVER THE CROSS SECTION OF PAVEMENT MATERIAL.
5. FOR ROCK ROADBED. SEE GEOTECH NOTES.
6. APPLICATION RATE FOR ASPHALT MATERIAL FOR TACK IS 0.84 LBS/SQ. YD.
7. TO COVER TACK COAT FOR TRAFFIC. ESTIMATED AT 3 LBS. PER SQ. YD.

PAVING SUMMARY

COUNTY OF	ITEM NO.	SHEET NO.
BUTLER	3-2042.30	R2G

PAVING AREAS

ITEM	NOTES	DEPTH (inches)	US 231	NATCHER PARKWAY/ RAMPS										TOTAL PROJECT
			S	Q	U	A	R	E		Y	A	R	D	S
CRUSHED STONE BASE		4.00		8,152										8,152
CRUSHED STONE BASE		6.00	3,069	12,229										15,298
CRUSHED STONE BASE		7.50		3,595										3,595
CRUSHED STONE BASE		9.00		5,336										5,336
CRUSHED STONE BASE (WEDGE) (RAMP FULL DEPTH)	4	8.55		6,567										6,567
CRUSHED STONE BASE (WEDGE) (RAMP FULL DEPTH)	4	10.18		3,879										3,879
CRUSHED AGGREGATE SIZE NO 23	5	12.00		17,478										17,478
CRUSHED AGGREGATE SIZE NO 23	5	15.00	3,069	26,119										29,188
ASPHALT SEAL AGGREGATE				6,264										6,264
ASPHALT SEAL COAT				6,264										6,264
LEVELING & WEDGING PG64-22		0.50	2,500											2,500
CL3 ASPH BASE 1.00D PG64-22		3.50		30,720										30,720
CL2 ASPH BASE 0.75D PG64-22		2.50	3,813	17,090										20,903
CL2 ASPH BASE 0.75D PG64-22		3.00	3,069	11,970										15,039
CL2 ASPH SURF 0.38D PG64-22		1.50	24,871	16,960										41,831
CL3 ASPH SURF 0.38A PG64-22		1.50		11,218										11,218
ASPHALT MATERIAL FOR TACK			3,069	59,779										66,661
SAND FOR BLOTTER				28,374										32,187

PAVING SUMMARY

ITEM CODE	ITEM	NOTES	UNIT	US 231	NATCHER PARKWAY/ RAMPS				TOTAL PROJECT
00003	CRUSHED STONE BASE	1	TON	1,059	15,905				16,964
00080	CRUSHED AGGREGATE SIZE NO 23	1 5	TON	2,647	34,588				37,235
00100	ASPHALT SEAL AGGREGATE	2	TON		125				125
00103	ASPHALT SEAL COAT	3	TON		15				15
00190	LEVELING & WEDGING PG64-22		TON	69					69
00214	CL3 ASPH BASE 1.00D PG64-22		TON		5,914				5,914
00221	CL2 ASPH BASE 0.75D PG64-22		TON	1,031	4,325				5,356
00301	CL2 ASPH SURF 0.38D PG64-22		TON	2,052	1,399				3,451
22906ES403	CL3 ASPH SURF 0.38A PG64-22		TON		925				925
00356	ASPHALT MATERIAL FOR TACK	6	TON	3	25				28
02702	SAND FOR BLOTTER	7	TON	6	43				49

NOTES

ALL ASPHALT MIXTURES SHALL BE ESTIMATED AT 110 LBS. PER SQ. YD. PER INCH OF DEPTH, UNLESS NOTED OTHERWISE.

1. ESTIMATED AT 115 LBS. PER SQ. YD. PER INCH OF DEPTH.
2. ESTIMATED AT 20 LBS. PER SQ. YD. X 2 APPLICATIONS
3. ESTIMATED AT 2.40 LBS. PER SQ. YD. X 2 APPLICATIONS
4. DEPTH SHOWN IS APPROXIMATE EQUIVALENT AND IS BASED ON AVERAGE DEPTH THAT VARIES OVER THE CROSS SECTION OF PAVEMENT MATERIAL.
5. FOR ROCK ROADBED. SEE GEOTECH NOTES.
6. APPLICATION RATE FOR ASPHALT MATERIAL FOR TACK IS 0.84 LBS/SQ. YD.
7. TO COVER TACK COAT FOR TRAFFIC. ESTIMATED AT 3 LBS. PER SQ. YD.

REVISED 3-11-2021

COUNTY OF	ITEM NO.	SHEET NO.
BUTLER	3-2042.30	R2G

PAVING SUMMARY

COUNTY OF	ITEM NO.	SHEET NO.
BUTLER	03-2042.30	S1

TRANSPORTATION CABINET
DEPARTMENT OF HIGHWAYS

U.S. 231 OVER KY 9007 (NATCHER PKWY)
BRIDGE REHABILITATION PLANS (DWG. NO. 18003)
BRIDGE MAINTENANCE ID NO. 016B00054N

ESTIMATE OF QUANTITIES

BID ITEM CODE		02006	02998	03299	03300	04795	04810	08151	08504	08510	08526	08534	08549	08551	23032EN	24094EC				
BID ITEM	BRIDGE NO.	REMOVE CONCRETE MEDIAN	MASONRY COATING	ARMORED EDGE FOR CONCRETE	ELIMINATE TRANSVERSE JOINT	CONDUIT, 2 IN.	ELECTRICAL JUNCTION BOX	STEEL REINFORCEMENT, EPOXY COATED	EPOXY SAND SLURRY	REMOVE EPOXY BIT. FOREIGN OVERLAY	CONC. CLASS M FULL DEPTH PATCH	CONCRETE OVERLAY, LATEX	BLAST CLEANING	MACHINE PREPARATION OF SLAB	BRIDGE BARRIER RETROFIT	PARTIAL DEPTH PATCHING				
LOCATION		L.F.	S.Y.	L.F.	L.F.	L.F.	EACH	LBS.	S.Y.	S.Y.	C.Y.	C.Y.	S.Y.	S.Y.	L.F.	C.Y.				
U.S. 231 OVER KY 9007	016B00054N	294	515	188	188	351	2	10894	131	1568	23	114.6	2226	523	684	29				
BRIDGE TOTAL		294	515	188	188	351	2	10894	131	1568	23	114.6	2226	523	684	29				

GENERAL NOTES:

SAWCUT ONE (1) INCH DEEP PRIOR TO REMOVING EXISTING CONCRETE TO FACILITATE A CLEAN LINE.

FOR BONDING NEW CONCRETE TO EXISTING SURFACES & DOWELING INTO EXISTING CONCRETE, SEE SECTIONS 511 & 826 OF THE STANDARD SPECIFICATIONS.

ATTACH GUARDRAIL CONNECTOR (TYPE A) TO BARRIER RETROFIT AT BRIDGE ENDS IN GENERAL CONFORMITY TO STANDARD DRAWING NO. RBC-005 WITH ALL MODIFICATIONS AND ADJUSTMENTS APPROVED BY THE ENGINEER.

FORM AN OPEN JOINT IN BARRIER TO ALIGN BARRIERS AT BRIDGE WINGWALLS.

SPECIAL NOTES:

SEE ATTACHED SPECIAL NOTES FOR THE FOLLOWING ITEMS.

1. BRIDGE DECK RESTORATION AND WATERPROOFING WITH CONCRETE OVERLAYS.
2. ELIMINATING TRANSVERSE JOINTS ON BRIDGES.
3. REMOVE CONCRETE MEDIAN.
4. BRIDGE BARRIER RETROFIT.

STATE OF KENTUCKY
LEE M. SEWELL
25363
LICENSED PROFESSIONAL ENGINEER

Lee Sewell

NOT TO SCALE

REHABILITATION PLANS (DWG. NO. 18003)
U.S. 231 OVER KY 9007 (NATCHER PARKWAY)
BRIDGE MAINTENANCE #016B00054N

Power InRoads v8.11.9.397 E-SHEET NAME: USER: LeeS DATE PLOTTED: September 8, 2020 FILE NAME: P:\170024 - PB - NATCHER PARKWAY - US 231\CADD\STRUCTURES DRAWINGS\001_18003_S001_TITLE_SHEET.DGN

COUNTY OF	ITEM NO.	SHEET NO.
BUTLER	03-2042.30	S1

TRANSPORTATION CABINET
DEPARTMENT OF HIGHWAYS

U.S. 231 OVER KY 9007 (NATCHER PKWY)
BRIDGE REHABILITATION PLANS (DWG. NO. 18003)
BRIDGE MAINTENANCE ID NO. 016B00054N

ESTIMATE OF QUANTITIES

BID ITEM CODE		02006	02998	03299	03300	04795	04810	08151	08504	08510	08526	08534	08549	08551	23032EN	24094EC				
BID ITEM	BRIDGE NO.	REMOVE CONCRETE MEDIAN	MASONRY COATING	ARMORED EDGE FOR CONCRETE	ELIMINATE TRANSVERSE JOINT	CONDUIT, 2 IN.	ELECTRICAL JUNCTION BOX	STEEL REINFORCEMENT, EPOXY COATED	EPOXY SAND SLURRY	REMOVE EPOXY BIT. FOREIGN OVERLAY	CONC. CLASS M FULL DEPTH PATCH	CONCRETE OVERLAY, LATEX	BLAST CLEANING	MACHINE PREPARATION OF SLAB	BRIDGE BARRIER RETROFIT	PARTIAL DEPTH PATCHING				
LOCATION		L.F.	S.Y.	L.F.	L.F.	L.F.	EACH	LBS.	S.Y.	S.Y.	C.Y.	C.Y.	S.Y.	S.Y.	L.F.	C.Y.				
U.S. 231 OVER KY 9007	016B00054N	294	515	188	188	351	2	10894	131	1568	23	114.6	2226	523	684	29				
BRIDGE TOTAL		294	515	188	188	351	2	10894	131	1568	23	114.6	2226	523	684	29				

REMOVED QUANTITIES:
REMOVE ASPHALT MEDIAN
CONCRETE SEALING
BRIDGE OVERLAY APPR. PAVEMENT

GENERAL NOTES:

SAWCUT ONE (1) INCH DEEP PRIOR TO REMOVING EXISTING CONCRETE TO FACILITATE A CLEAN LINE.

FOR BONDING NEW CONCRETE TO EXISTING SURFACES & DOWELING INTO EXISTING CONCRETE, SEE SECTIONS 511 & 826 OF THE STANDARD SPECIFICATIONS.

ATTACH GUARDRAIL CONNECTOR (TYPE A) TO BARRIER RETROFIT AT BRIDGE ENDS IN GENERAL CONFORMITY TO STANDARD DRAWING NO. RBC-005 WITH ALL MODIFICATIONS AND ADJUSTMENTS APPROVED BY THE ENGINEER.

FORM AN OPEN JOINT IN BARRIER TO ALIGN BARRIERS AT BRIDGE WINGWALLS.

SPECIAL NOTES:

SEE ATTACHED SPECIAL NOTES FOR THE FOLLOWING ITEMS.

1. BRIDGE DECK RESTORATION AND WATERPROOFING WITH CONCRETE OVERLAYS.
2. ELIMINATING TRANSVERSE JOINTS ON BRIDGES.
3. REMOVE CONCRETE MEDIAN.
4. BRIDGE BARRIER RETROFIT.

REMOVE SPECIAL NOTE: CONCRETE SEALING

STATE OF KENTUCKY
LEE M. SEWELL
25363
LICENSED PROFESSIONAL ENGINEER

L M Sewell

NOT TO SCALE

REHABILITATION PLANS (DWG. NO. 18003)
U.S. 231 OVER KY 9007 (NATCHER PARKWAY)
BRIDGE MAINTENANCE #016B00054N

FILE NAME: P:\170024 - PB - NATCHER PARKWAY - US 231\CADD\STRUCTURES DRAWINGS\001_18003_S001_TITLE_SHEET.DGN
USER: LeeS
DATE PLOTTED: September 8, 2020
E-SHEET NAME:
Power InRoads v8.11.9.397